Vault™ | 3996-4

33" top-/undermount double-bowl kitchen sink

Features

- 36" minimum base cabinet width
- Double-equal bowls
- 6" (152 mm) depth
- Rear drains increase workspace in the sink and storage space underneath
- Includes installation hardware
- Three faucet holes and one accessory hole to the right



Sustainability

CONTAINS 80%+ RECYCLED CONTENT

Available Colors/Finishes

Color tiles intended for reference only.

NA Stainless Steel

1-800-4KOHLER (1-800-456-4537)
Kohler Co. reserves the right to make revisions without notice to product specifications.
For the most current specification sheet, go to www.kohler.com USA or www.kohler.ca Canada.
10-09-2026 01:01 - US-CA

THE BOLD LOOK OF KOHLER

Codes/Standards

ADA compliant when installed to the specific requirements of these regulations.

ADA

ASME A112.19.3/CSA B45.4
ADA
ICC/ANSI A117.1

Technical Information

All product dimensions are nominal.

Number of Deck Holes:	4
Faucet Hole(s) Size:	1-7/16" (37 mm)
Center(s):	8" (203 mm)
Drain Hole Diameter:	3-5/8" (92 mm)
Minimum Base Cabinet Width:	36" (914 mm)
Basin Configuration:	Equal Bowls

Material

- Premium 18-gauge stainless steel
- Premium 18-gauge stainless steel

Included Components

- 1130570 Hardware Kit, Self Rimming

Recommended Products/Accessories

- 23726 Drain treatment
- 23729 Stainless steel cleaner
- 6641 Stainless steel sink rack
- 8801 Sink drain and strainer with tailpiece
- 8799 Sink drain and strainer basket, less tailpiece

Optional Products/Accessories

- 1177161 Installation Clip Kit
- 6434 Saddle utility rack
- 6667 Wood cutting board
- 11352 Disposal flange with stopper

Warranty

See website for detailed warranty information.

KOHLER® Stainless Steel Sinks Lifetime Limited Warranty

1-800-4KOHLER (1-800-456-4537)
Kohler Co. reserves the right to make revisions without notice to product specifications.
For the most current specification sheet, go to www.kohler.com USA or www.kohler.ca Canada.
10-09-2026 01:01 - US-CA

THE BOLD LOOK OF KOHLER.

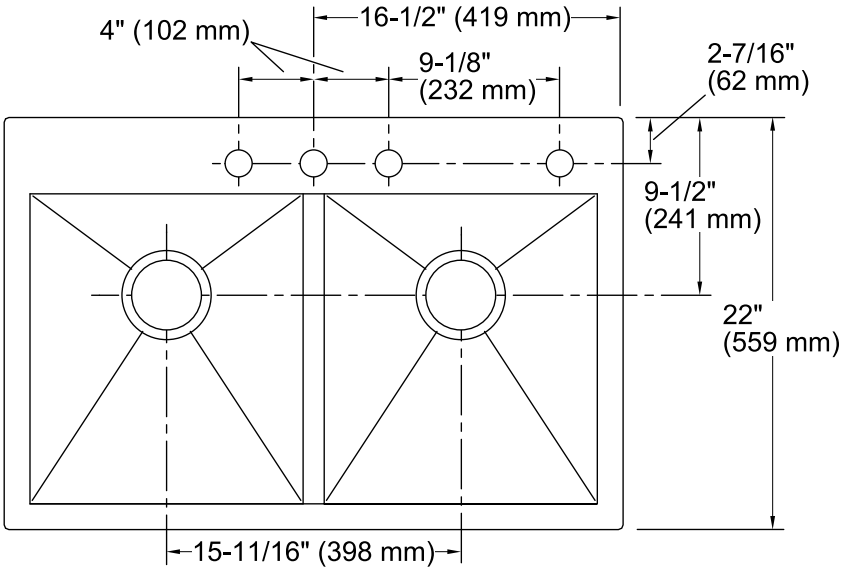

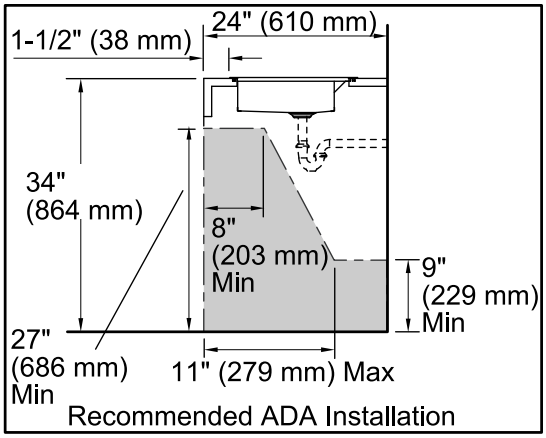

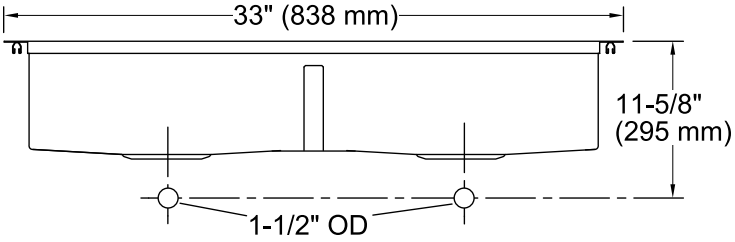

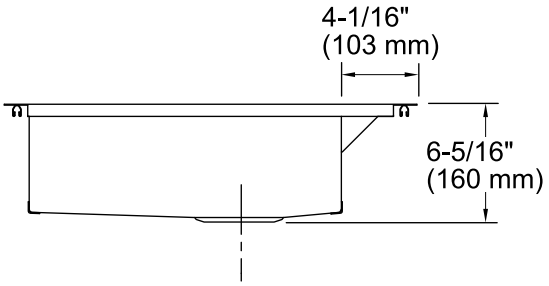

Installation

- For undermount installation, countertop thickness cannot be greater than 1" (25 mm) for ADA compliance
- Top-mount or undermount

Installation Notes

Install this product according to the installation instructions.

ADA compliant when installed to the specific requirements of these regulations.

1-800-4KOHLER (1-800-456-4537)
Kohler Co. reserves the right to make revisions without notice to product specifications.
For the most current specification sheet, go to www.kohler.com USA or www.kohler.ca Canada.
10-09-2026 01:01 - US-CA

THE BOLD LOOK OF KOHLER.