Northland™ | 6579-1

15" top-mount single-bowl bar sink

Features

- 15" (381 mm) minimum base cabinet width
- Single bowl
- 7" depth
- Single faucet hole



Sustainability

CONTAINS 80%+ RECYCLED CONTENT

ENDURES FOR GENERATIONS

Available Colors/Finishes

Color tiles intended for reference only.

	0	White
	96	Biscuit
	7	Black Black

1-800-4KOHLER (1-800-456-4537)
Kohler Co. reserves the right to make revisions without notice to product specifications.
For the most current specification sheet, go to www.kohler.com USA or www.kohler.ca Canada.
10-09-2026 03:41 - US-CA

THE BOLD LOOK OF KOHLER

Codes/Standards

ADA compliant when installed to the specific requirements of these regulations.
ADA permits a parallel approach to wet bars.

ADA

ASME A112.19.1/CSA B45.2
ADA
ICC/ANSI A117.1

Technical Information

All product dimensions are nominal.

Number of Deck Holes:	1
Faucet Hole(s) Size:	1-3/8" (35 mm)
Drain Hole Diameter:	3-7/8" (98 mm)
Minimum Base Cabinet Width:	15" (381 mm)
Basin Configuration:	Single Bowl
Cutout:	Top-mount, 14-1/4" x 14-1/4" (362 mm x 362 mm) with 1" (25 mm) radius corners

Material

- KOHLER® enameled cast iron

Recommended Products/Accessories

- 23726 Drain treatment
- 23725 Cast iron cleaner
- 8801 Sink drain and strainer with tailpiece
- 8799 Sink drain and strainer basket, less tailpiece

Optional Products/Accessories

- 11352 Disposal flange with stopper
- 9000 Adjustable P-trap with tubing outlet, 1-1/2" x 1-1/2"

Warranty

See website for detailed warranty information.

KOHLER® Enameled Cast Iron Kitchen and Bathroom Sink Lifetime Limited Warranty

1-800-4KOHLER (1-800-456-4537)
Kohler Co. reserves the right to make revisions without notice to product specifications.
For the most current specification sheet, go to www.kohler.com USA or www.kohler.ca Canada.
10-09-2026 03:41 - US-CA

THE BOLD LOOK OF KOHLER.

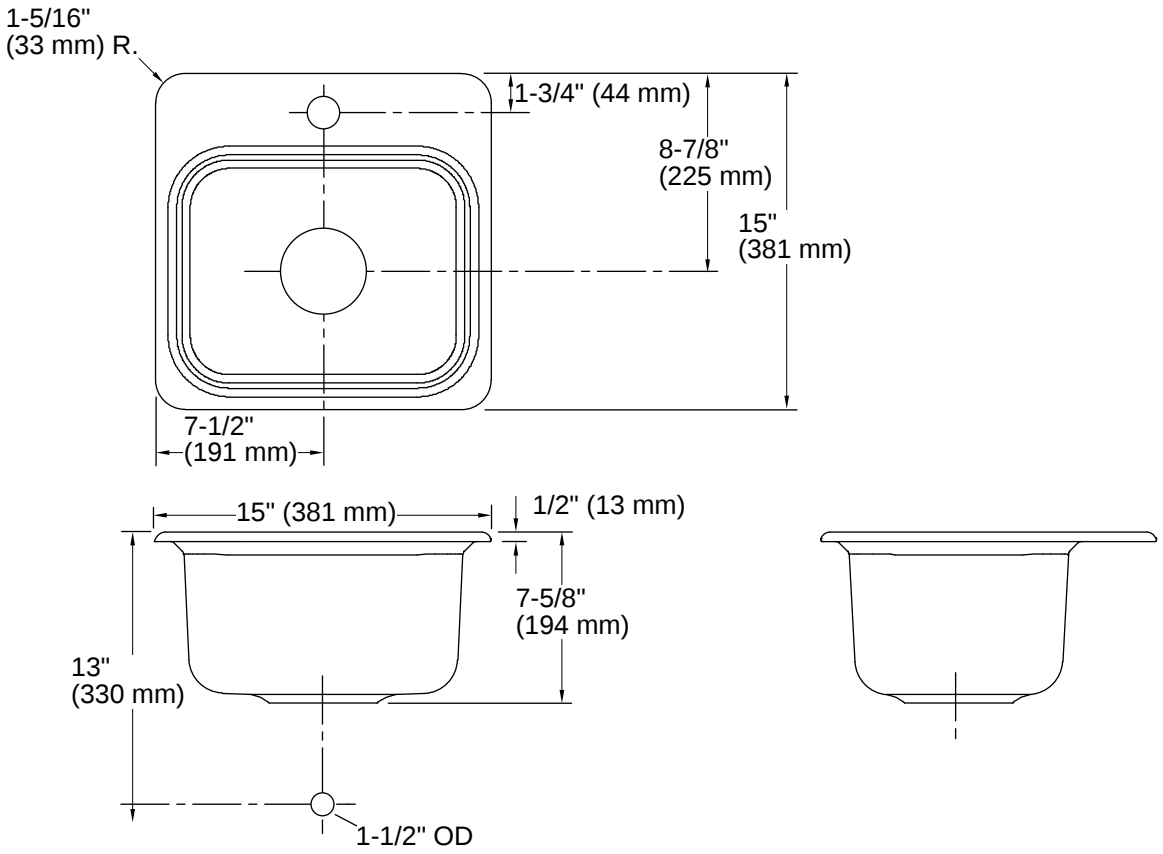

Installation

- Top-mount

Installation Notes

Install this product according to the installation instructions.

ADA compliant when installed to the specific requirements of these regulations.
ADA permits a parallel approach to wet bars.

1-800-4KOHLER (1-800-456-4537)
Kohler Co. reserves the right to make revisions without notice to product specifications.
For the most current specification sheet, go to www.kohler.com USA or www.kohler.ca Canada.
10-09-2026 03:41 - US-CA

THE BOLD LOOK OF KOHLER