Pinstripe® | K-13139-B

Wall-mount 6-7/8" non-diverter bath spout

Features

- Nondiverter bath spout with 1/2" NPT connection
- Coordinates with the Pinstripe collection of faucets and accessories



DISCONTINUED

1-800-4KOHLER (1-800-456-4537)
Kohler Co. reserves the right to make revisions without notice to product specifications.
For the most current specification sheet, go to www.kohler.com USA or www.kohler.ca Canada.
7-26-2026 18:05 - US-CA

Codes/Standards

ASME A112.18.1/CSA B125.1

Material

- Premium metal construction for durability and reliability
- KOHLER finishes resist corrosion and tarnishing

Recommended Products/Accessories

K-23723 Faucet cleaner

Warranty

See website for detailed warranty information.

KOHLER® Faucet Lifetime Limited Warranty

DISCONTINUED

1-800-4KOHLER (1-800-456-4537)
Kohler Co. reserves the right to make revisions without notice to product specifications.
For the most current specification sheet, go to www.kohler.com USA or www.kohler.ca Canada.
7-26-2026 18:05 - US-CA

THE BOLD LOOK OF KOHLER.

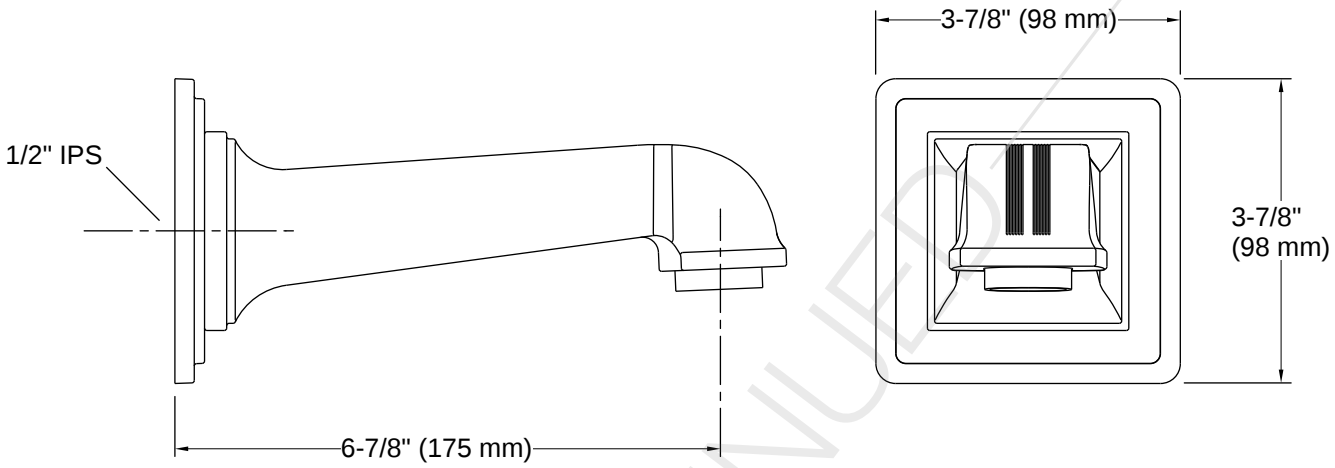

DISCONTINUED

Installation

- Wall-mount

Installation Notes

Install this product according to the installation instructions.

1-800-4KOHLER (1-800-456-4537)
Kohler Co. reserves the right to make revisions without notice to product specifications.
For the most current specification sheet, go to www.kohler.com USA or www.kohler.ca Canada.
7-26-2026 18:05 - US-CA

THE BOLD LOOK OF KOHLER.