K-301-K

3/4" ceramic high-flow valve system

Features

- High-flow valve ensures optimal water flow performance
- Quarter-turn ceramic disc valves exceed industry longevity standards, ensuring durable performance for life
- 25.0 to 30.0 gpm (gallons per minute) flow rate
- For use with bath- or deck-mount faucets
- Requires valve trim (sold separately)



Available Colors/Finishes

Color tiles intended for reference only.

NA NA Not Applicable

1-800-4KOHLER (1-800-456-4537)
Kohler Co. reserves the right to make revisions without notice to product specifications.
For the most current specification sheet, go to www.kohler.com USA or www.kohler.ca Canada.
8-06-2026 12:27 - US-CA

THE BOLD LOOK OF KOHLER

Codes/Standards

ASME A112.18.1/CSA B125.1

Valves

Included Valve:	Transfer

Material

- Brass valve bodies
- Brass

Included Components

Warranty

See website for detailed warranty information.

KOHLER® Faucet Lifetime Limited Warranty

1-800-4KOHLER (1-800-456-4537)
Kohler Co. reserves the right to make revisions without notice to product specifications.
For the most current specification sheet, go to www.kohler.com USA or www.kohler.ca Canada.
8-06-2026 12:27 - US-CA

THE BOLD LOOK OF KOHLER.

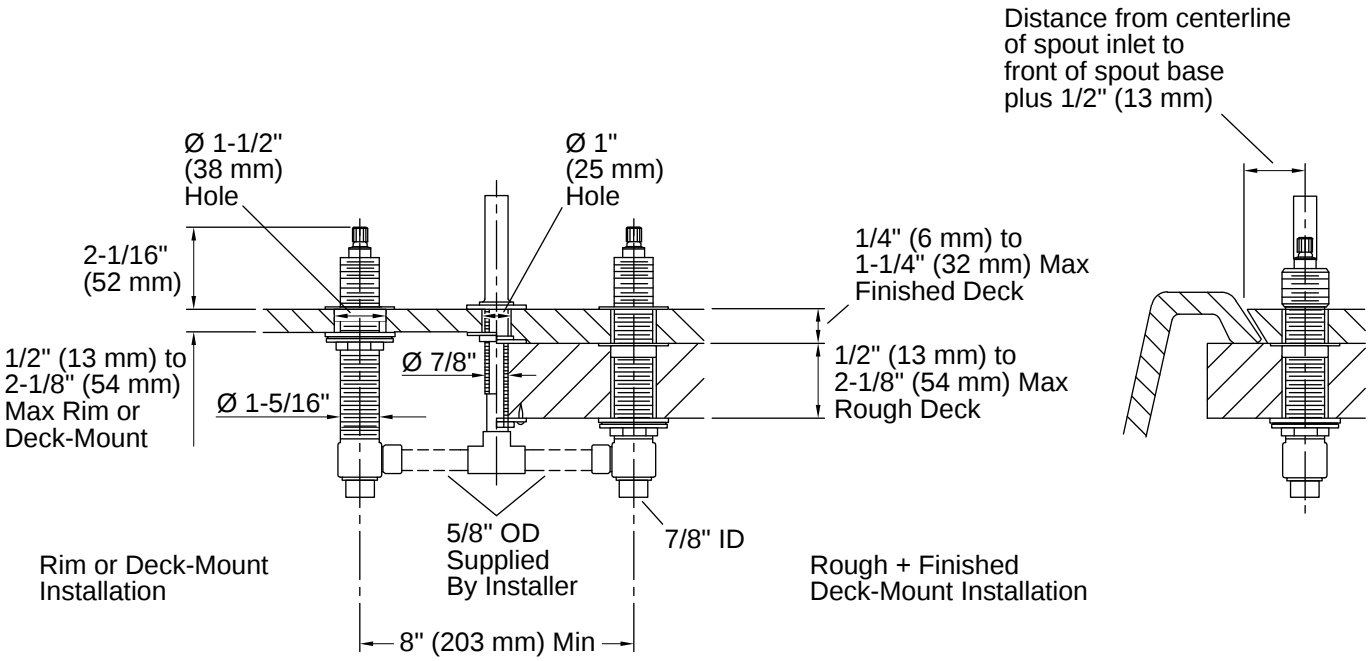

Installation Notes

Install this product according to the installation instructions.

1-800-4KOHLER (1-800-456-4537)
Kohler Co. reserves the right to make revisions without notice to product specifications.
For the most current specification sheet, go to www.kohler.com USA or www.kohler.ca Canada.
8-06-2026 12:27 - US-CA

THE BOLD LOOK OF KOHLER.