Undertone® | K-3339

13-3/4" undermount single-bowl kitchen sink

Features

- 18" (457 mm) minimum base cabinet width
- Single bowl
- 5-1/4" depth
- Includes installation hardware
- Small size fits compact spaces



Sustainability

Available Colors/Finishes

Color tiles intended for reference only.

NA Stainless Steel

1-800-4KOHLER (1-800-456-4537)
Kohler Co. reserves the right to make revisions without notice to product specifications.
For the most current specification sheet, go to www.kohler.com USA or www.kohler.ca Canada.
8-06-2026 11:29 - US-CA

Codes/Standards

None Applicable

Technical Information

All product dimensions are nominal.

Drain Hole Diameter:	3-5/8" (92 mm)
Minimum Base Cabinet Width:	18" (457 mm)
Basin Configuration:	Single Bowl

Material

- Premium 18-gauge stainless steel

Included Components

Recommended Products/Accessories

K-23726 Drain treatment

K-23729 Stainless steel cleaner

K-8801 Sink drain and strainer with tailpiece

K-8799 Sink drain and strainer basket, less tailpiece

Warranty

See website for detailed warranty information.

KOHLER® Stainless Steel Sinks Lifetime Limited Warranty

1-800-4KOHLER (1-800-456-4537)
Kohler Co. reserves the right to make revisions without notice to product specifications.
For the most current specification sheet, go to www.kohler.com USA or www.kohler.ca Canada.
8-06-2026 11:29 - US-CA

THE BOLD LOOK OF KOHLER.

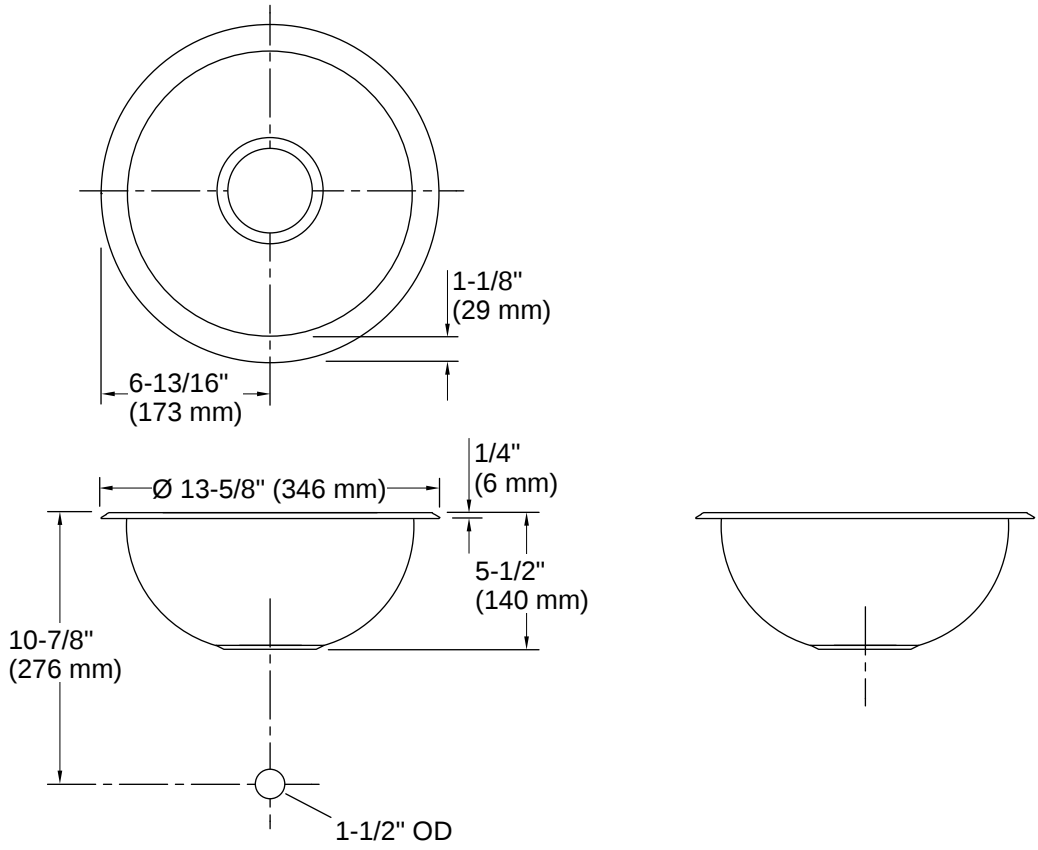

Installation

- Undermount

Installation Notes

Install this product according to the installation instructions.

1-800-4KOHLER (1-800-456-4537)
Kohler Co. reserves the right to make revisions without notice to product specifications.
For the most current specification sheet, go to www.kohler.com USA or www.kohler.ca Canada.
8-06-2026 11:29 - US-CA

THE BOLD LOOK OF KOHLER.