KOHLER®

Rêve® | K-5026-8

39" pedestal bathroom sink basin with 8" widespread faucet holes

Features

- 8" (203 mm) widespread faucet holes
- Deep, V-shaped basin
- Overflow drain with included Polished Chrome cap
- Combines with the K-5031 shroud or K-5032 pedestal to create a pedestal or wall-mount sink
- Coordinates with other products in the Rêve collection



1-800-4KOHLER (1-800-456-4537)
Kohler Co. reserves the right to make revisions without notice to product specifications.
For the most current specification sheet, go to www.kohler.com USA or www.kohler.ca Canada.
7-27-2026 22:00 - US-CA

THE BOLD LOOK OF KOHLER®

Codes/Standards

ASME A112.19.2/CSA B45.1

Technical Information

All product dimensions are nominal and may vary per ASME A112.19.2 tolerances

Number of Deck Holes:	3
Faucet Hole(s) Size:	1-3/8" (35 mm)
Drain Hole Diameter:	1-3/4" (44 mm)
Basin Configuration:	Single Bowl

Material

- Fireclay

Recommended Products/Accessories

K-23726 Drain treatment

K-23725 Cast iron cleaner

Warranty

See website for detailed warranty information.

KOHLER® One-Year Limited Warranty

1-800-4KOHLER (1-800-456-4537)
Kohler Co. reserves the right to make revisions without notice to product specifications.
For the most current specification sheet, go to www.kohler.com USA or www.kohler.ca Canada.
7-27-2026 22:00 - US-CA

THE BOLD LOOK OF KOHLER.

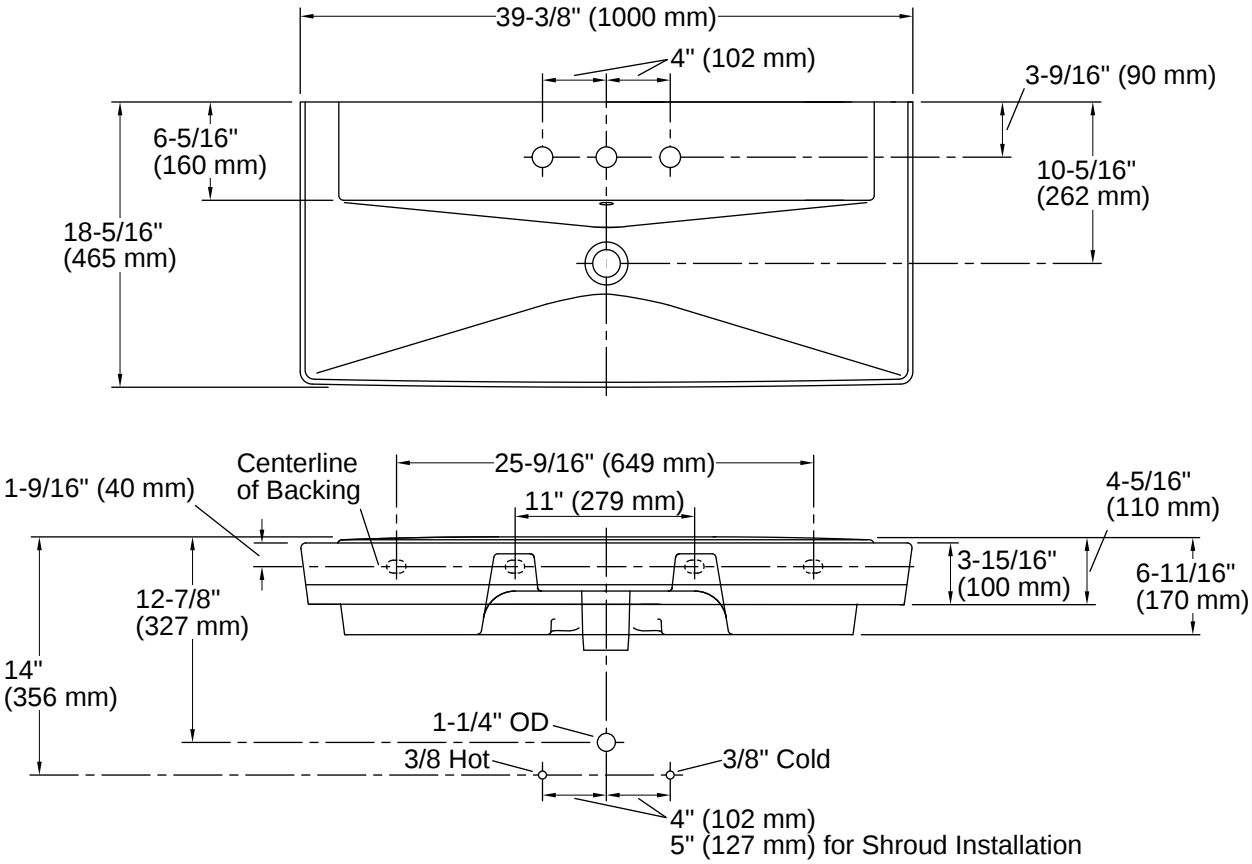

Installation

- Pedestal or wall-mount

Installation Notes

Install this product according to the installation instructions.

1-800-4KOHLER (1-800-456-4537)
Kohler Co. reserves the right to make revisions without notice to product specifications.
For the most current specification sheet, go to www.kohler.com USA or www.kohler.ca Canada.
7-27-2026 22:00 - US-CA

THE BOLD LOOK OF KOHLER.