Karbon® | K-6268-C11

Articulating deck-mount bar sink faucet with 6" spout, Silver tube and lever handle

Features

- Unique articulated-joint design directs water to any angle and folds out of the way when not in use
- Single 1-5/16" (33 mm) diameter remote joystick lever handle is simple to use and makes adjusting water temperature easy
- KOHLER® ceramic disc valves exceed industry longevity standards for a lifetime of durable performance
- Integral sprayhead provides laminar flow or aerated spray at the touch of a button
- Variable spout reach from less than 2" (51 mm) to over 13" (330 mm)
- 1.8 gpm (6.8 lpm) maximum flow rate at 60 psi (4.14 bar)



DISCONTINUED

1-800-4KOHLER (1-800-456-4537)
Kohler Co. reserves the right to make revisions without notice to product specifications.
For the most current specification sheet, go to www.kohler.com USA or www.kohler.ca Canada.
8-18-2026 15:16 - US-CA

THE BOLD LOOK OF KOHLER

Codes/Standards

ADA, CSA B651 compliant when installed to the specific requirements of these regulations.

ADA CSA B651

ASME A112.18.1/CSA B125.1
NSF/ANSI/CAN 372
NSF/ANSI/CAN 61
DOE - Energy Policy Act 1992
California Energy Commission (CEC)
NSF/ANSI/CAN 61|NSF/ANSI/CAN 372
ADA
ICC/ANSI A117.1
CSA B651

Technical Information

All product dimensions are nominal.

Handle

Handle Style/Type:	Lever

Spout

Spout Reach:	6" (152 mm)

Flow Rate

Faucet Flow Rate:	1.75 gpm (6.6 l/min)

Material

- Premium metal and carbon fiber construction
- KOHLER finishes resist corrosion and tarnishing

Recommended Products/Accessories

- K-23723 Faucet cleaner

Warranty

See website for detailed warranty information.

KOHLER® Faucet Lifetime Limited Warranty

DISCONTINUED

1-800-4KOHLER (1-800-456-4537)
Kohler Co. reserves the right to make revisions without notice to product specifications.
For the most current specification sheet, go to www.kohler.com USA or www.kohler.ca Canada.
8-18-2026 15:16 - US-CA

THE BOLD LOOK OF KOHLER.

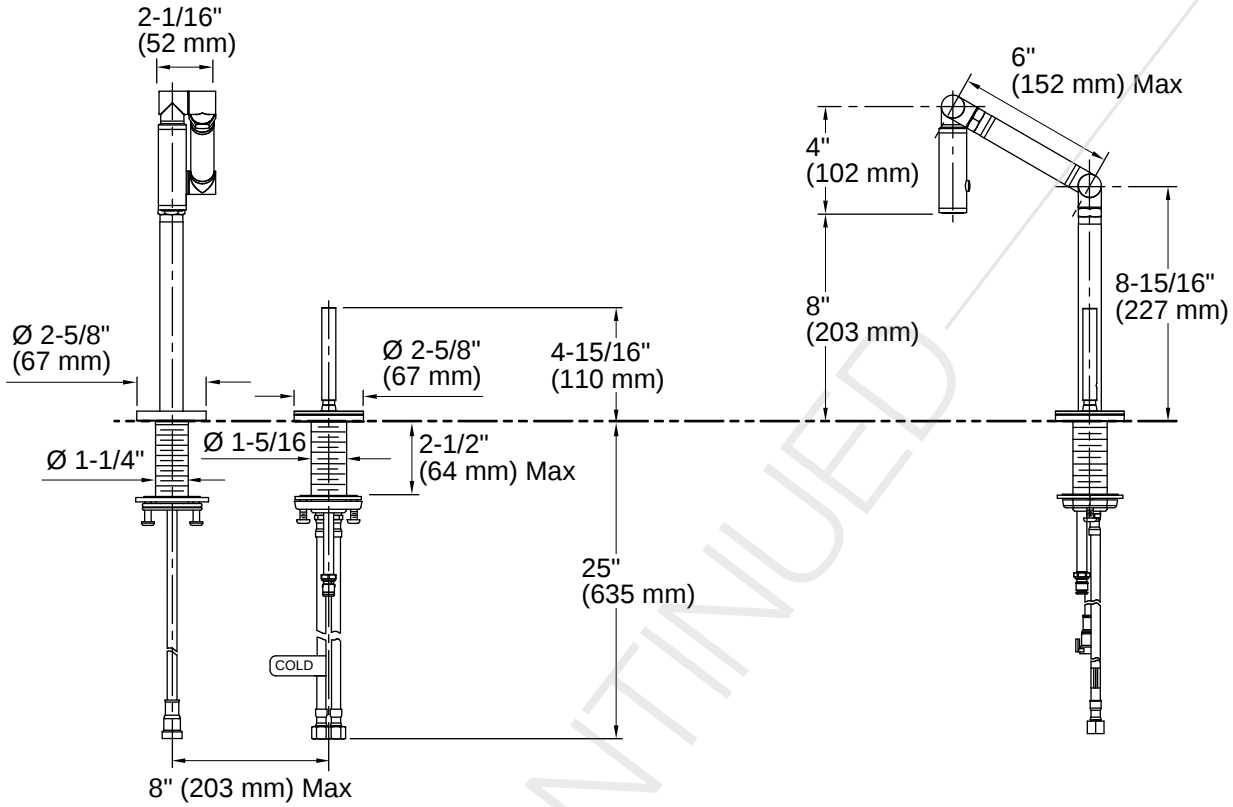

DISCONTINUED

Installation

- Two-hole deck-mount
- Flexible supply lines and installation ring simplify installation

Installation Notes

Install this product according to the installation instructions.

ADA compliant for faucet handles only
ADA, CSA B651 compliant when installed to the specific requirements of these regulations.

1-800-4KOHLER (1-800-456-4537)
Kohler Co. reserves the right to make revisions without notice to product specifications.
For the most current specification sheet, go to www.kohler.com USA or www.kohler.ca Canada.
8-18-2026 15:16 - US-CA

THE BOLD LOOK OF KOHLER