Karbon® | K-6269-C11

Articulating wall-mount bathroom sink faucet with Silver tube and lever handle

Features

- Metal and carbon fiber construction
- Articulating spout
- One-piece, self-contained ceramic disc valve allows for both volume and temperature control
- Less drain
- 2" (51 mm) diameter valve with remote lever handle
- 1-1/2" - 6" (38 - 152 mm) spout reach
- With silver tube
- 1.5 gpm (5.7 lpm) maximum flow rate at 60 psi (4.14 bar)



DISCONTINUED

1-800-4KOHLER (1-800-456-4537)
Kohler Co. reserves the right to make revisions without notice to product specifications.
For the most current specification sheet, go to www.kohler.com USA or www.kohler.ca Canada.
7-27-2026 18:01 - US-CA

THE BOLD LOOK OF KOHLER

Codes/Standards

ADA compliant when installed to the specific requirements of these regulations.

ADA

ASME A112.18.1/CSA B125.1
NSF/ANSI/CAN 372
NSF/ANSI/CAN 61
EPA WaterSense®
NSF/ANSI/CAN 61|NSF/ANSI/CAN 372
ADA
ICC/ANSI A117.1

Technical Information

All product dimensions are nominal.

Handle

Handle Style/Type:	Lever

Spout

Spout Reach:	6" (152 mm)

Flow Rate

Faucet Flow Rate:	1.5 gpm (5.7 l/min)

Recommended Products/Accessories

K-23726 Drain treatment

K-23723 Faucet cleaner

Warranty

See website for detailed warranty information.

KOHLER® Faucet Lifetime Limited Warranty

DISCONTINUED

1-800-4KOHLER (1-800-456-4537)
Kohler Co. reserves the right to make revisions without notice to product specifications.
For the most current specification sheet, go to www.kohler.com USA or www.kohler.ca Canada.
7-27-2026 18:01 - US-CA

THE BOLD LOOK OF KOHLER.

Finished Wall Thickness	*
Thin Wall	0"- 5/8" (16 mm)
Standard Wall	1/2" (13 mm) - 1-1/8" (29 mm)
Thick Wall	1" (25 mm) - 1-5/8" (41 mm)

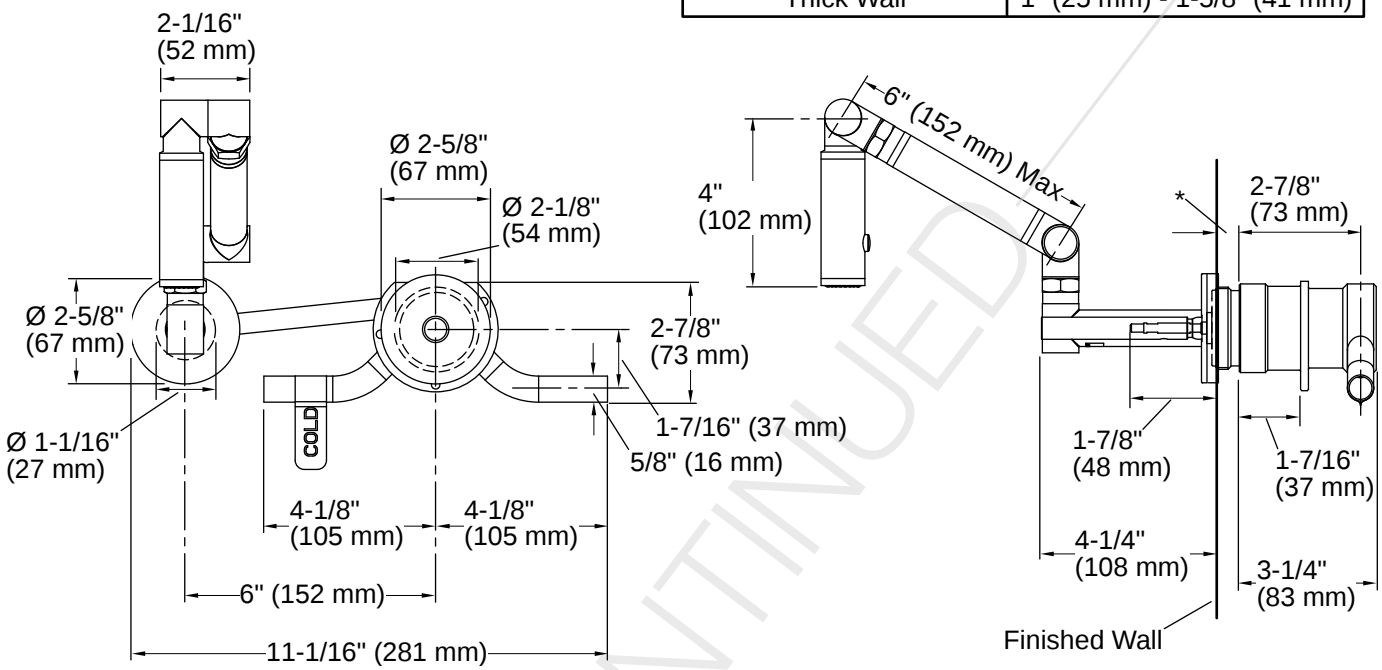

Installation

- Wall-mount

Installation Notes

Install this product according to the installation instructions.

WARNING: Risk of property damage. For exterior wall installations, ensure proper wall insulation to prevent frozen pipes.

NOTICE: Do not locate the faucet in close proximity to a direct heat source or use the faucet as a pot filler. Exposure to excessive heat will damage the integral sprayhead and spout joints and may cause severe discoloration to the carbon fiber tubing.

Special framing and support considerations are required to mount the wall-mount valve.

WARNING: Risk of property damage. Before finishing the wall, ensure the supply lines are connected to the mixer valve with the cold supply line plumbed on the left and the hot supply line plumbed on the right. Doing so will avoid replacing the finished wall due to error.

One 2-3/16″ (56 mm) diameter cutout hole is required for the valve. One 1-3/16″ (30 mm) diameter cutout hole is required for the spout.

DISCONTINUED

1-800-4KOHLER (1-800-456-4537)
Kohler Co. reserves the right to make revisions without notice to product specifications.
For the most current specification sheet, go to www.kohler.com USA or www.kohler.ca Canada.
7-27-2026 18:01 - US-CA

THE BOLD LOOK OF KOHLER.